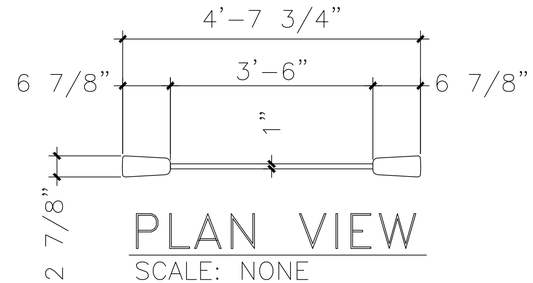

PLAN VIEW

SCALE: NONE

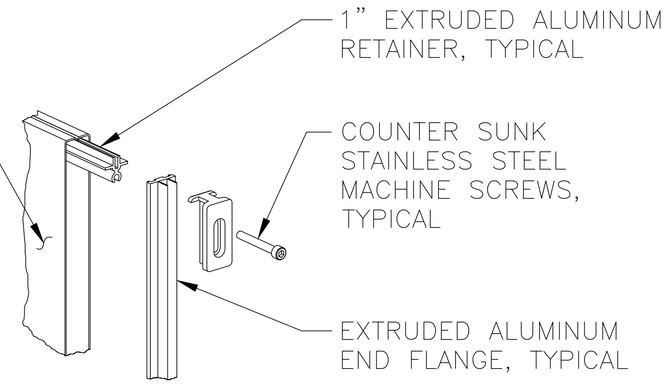

ISOMETRIC

SCALE: NONE

NOTES TO DESIGNER

(DO NOT INCLUDE ON CONSTRUCTION DRAWINGS)

1. COORDINATE WITH LANL MASTER SPECIFICATION 10 1405.

2. DRAWING DEVELOPED FOR ML-3/ML-4 PROJECTS. FOR ML-1/ML-2, ADDITIONAL REQUIREMENTS AND QA REVIEWS ARE REQUIRED.

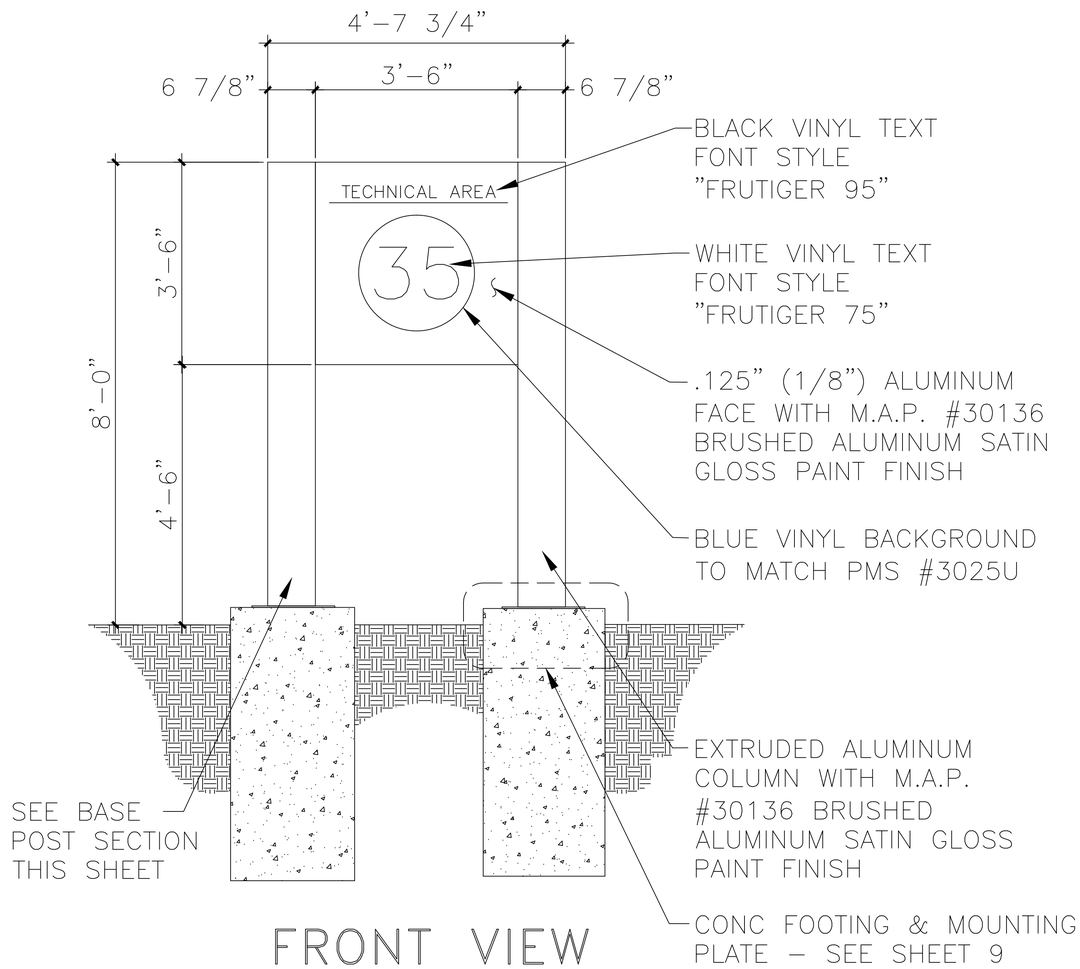

FRONT VIEW

SCALE: NONE

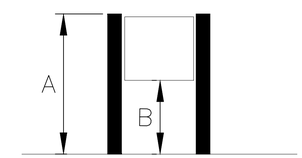

A: 8' MINIMUM/9' MAXIMUM
B: 2' MINIMUM

DESIGN GUIDANCE!
REMOVE THIS DIAGRAM WHEN INSERTED INTO A DRAWING PACKAGE

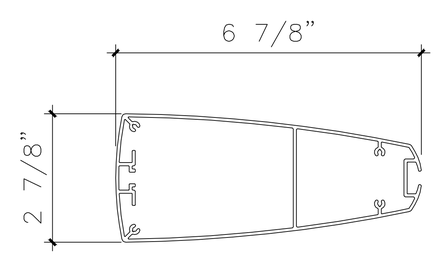

BASE POST SECTION

SCALE: NONE

NO	DATE	CLASS REV	ADC	DESCRIPTION	DWN	DSGN	CHKD	SUB	APP
1	8/30/12	UNCL	EJS	REVISED FTG DETAIL	SR	SR	RT	DC	TO

ENGINEERING STANDARDS PROGRAM

ENGINEERING STANDARDS MANUAL

TECH AREA IDENTIFICATION SIGN AND DETAIL

BLDG X TA-X

DRAWN	R.PEARSON
DESIGN	S.RICHARDSON
CHECKED	R.TROUT
DATE	5-17-04

SUBMITTED
DISCIPLINE POC: SCOTT RICHARDSON

APPROVED FOR RELEASE
STANDARDS MANAGER: TOBIN ORUCH

Los Alamos NATIONAL LABORATORY
PO Box 1663
Los Alamos, New Mexico 87545

SHEET 1
1 OF 9

CLASSIFICATION: U
REVIEWER: LARRY BAYS
DATE:

PROJECT ID: CHAPTER 4
DRAWING NO: ST-G2040-4
REV: 1

NEWDATE