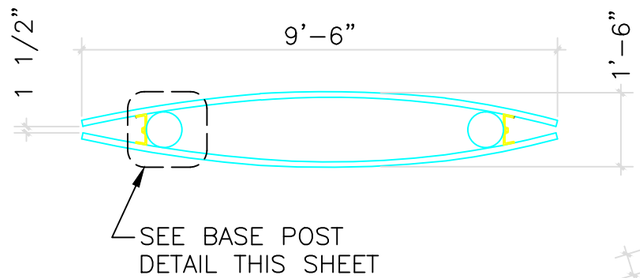

PLAN VIEW

SCALE: NONE

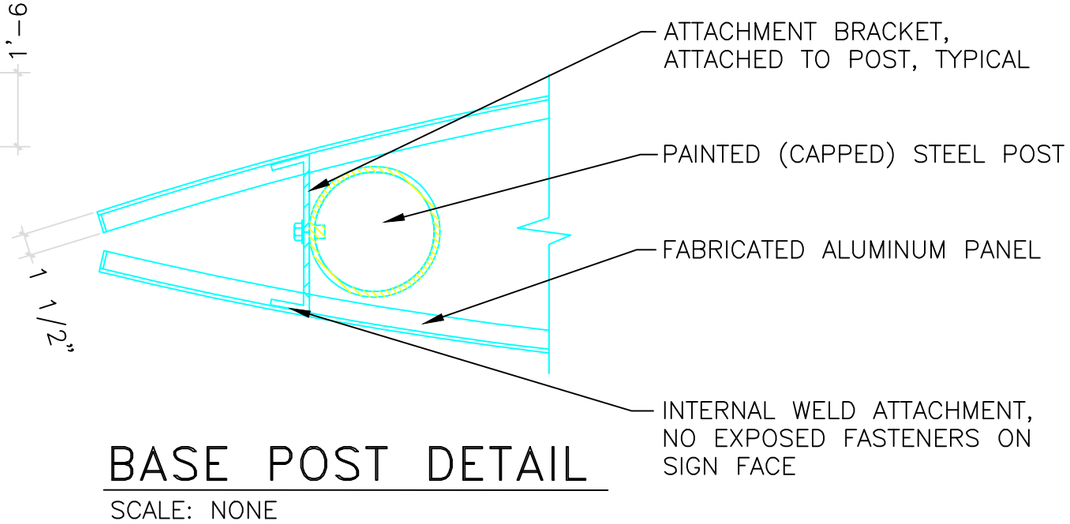

BASE POST DETAIL

SCALE: NONE

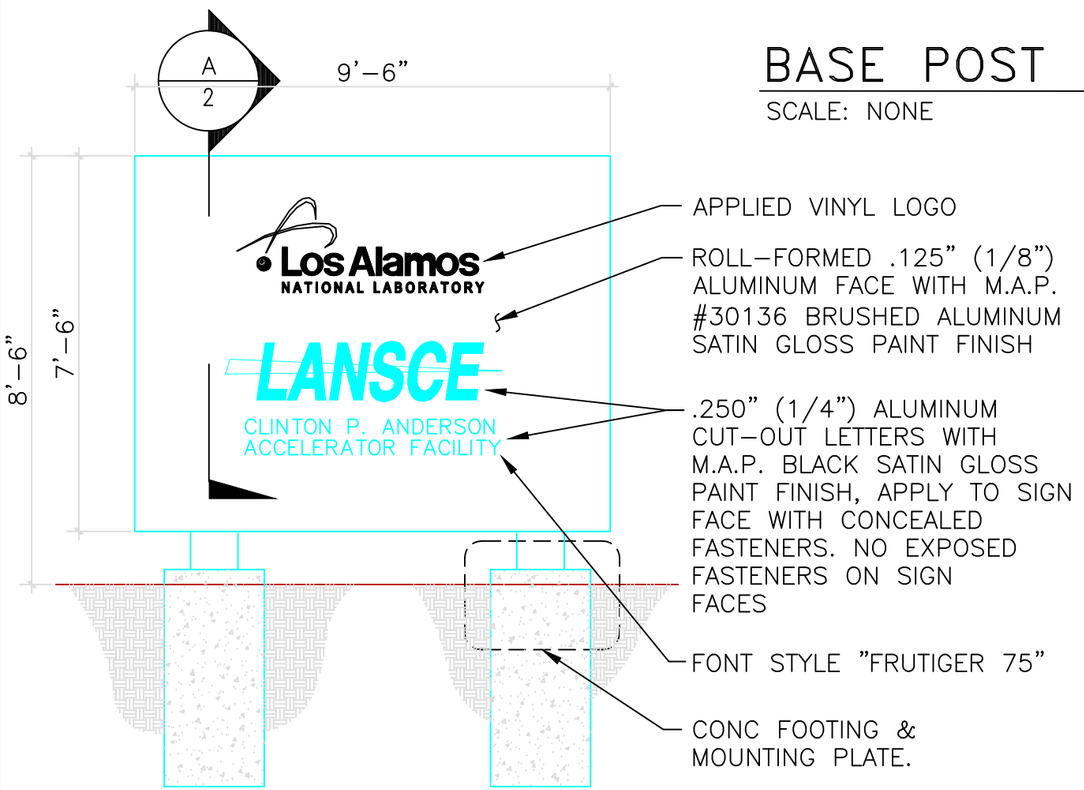

FRONT VIEW

SCALE: NONE

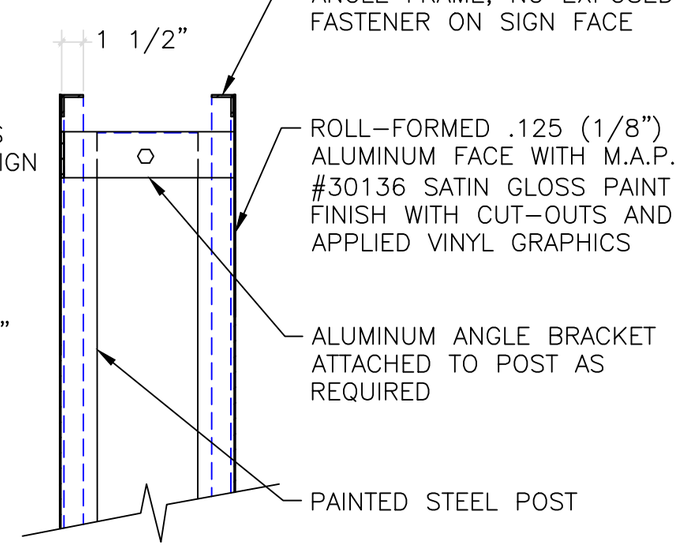

A/2 POST SECTION

SCALE: NONE

NOTES TO DESIGNER

(DO NOT INCLUDE ON CONSTRUCTION DRAWINGS)

1. COORDINATE WITH LANL MASTER SPECIFICATION 10 1405.

2. FOOTINGS ARE TO BE DESIGNED BY THE DESIGN AGENCY.

3. DRAWING DEVELOPED FOR ML-3/ML-4 PROJECTS. FOR ML-1/ML-2, ADDITIONAL REQUIREMENTS AND QA REVIEWS ARE REQUIRED.

NO	DATE	CLASS REV	ADC	DESCRIPTION	DWN	DSGN	CHKD	SUB	APP
1	8/30/12	UNCL	EJS	CLARIFIED FTG CONDITIONS	SR	SR	RT	DC	TO

ENGINEERING STANDARDS PROGRAM

ENGINEERING STANDARDS MANUAL

FACILITY COMPLEX IDENTIFICATION SIGN AND DETAIL

BLDG X TA-X

DRAWN	R.PEARSON
DESIGN	S.RICHARDSON
CHECKED	R.TROUT
DATE	5-17-04

SUBMITTED
DISCIPLINE POC: SCOTT RICHARDSON

APPROVED FOR RELEASE
STANDARDS MANAGER: TOBIN ORUCH

Los Alamos NATIONAL LABORATORY
PO Box 1663
Los Alamos, New Mexico 87545

SHEET 2
2 OF 9

CLASSIFICATION: U
REVIEWER: LARRY BAYS
DATE:

PROJECT ID: CHAPTER 4
DRAWING NO: ST-G2040-4
REV: 1