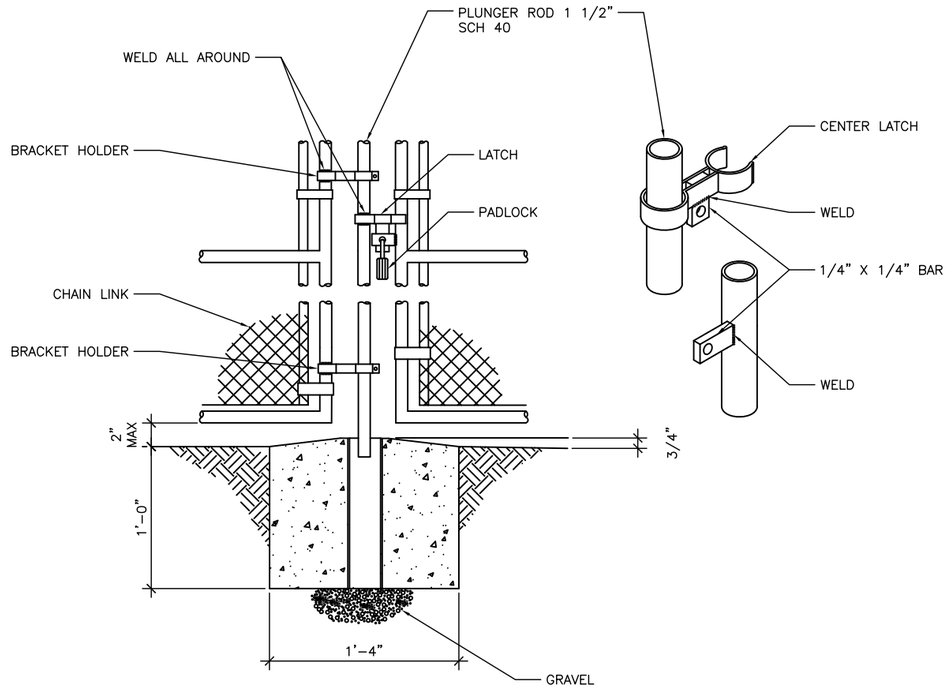

SECTION

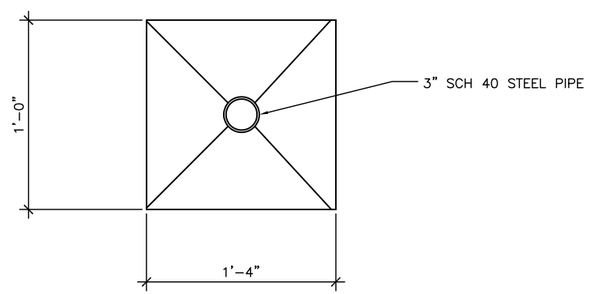

PLAN

X / C-XXXX GATE LATCHING DETAIL
SCALE: NONE

DRAWING DEVELOPED FOR ML-3/ML-4 PROJECTS. FOR ML-1/ML-2, ADDITIONAL REQUIREMENTS AND QA REVIEWS ARE REQUIRED. (REMOVE THIS NOTE WHEN INSERTED INTO A DRAWING PACKAGE).

NOTES FOR DESIGNER:
(DO NOT INCLUDE ON CONSTRUCTION DRAWINGS)

1. SEE SHEET 1.

NO	DATE	CLASS REV	DC	DESCRIPTION	DWN	DSGN	CHKD	SUB	APP
3	1-28-14	U		GENERAL REVISION	KT	MS	JG	RT	TO
2	2-22-05	U	DY	REVISED TO COMPLY WITH DRAFTING MANUAL. DWG. NO. WAS ST3831. REVISED ADTS - ENGINEERING LOGO.	RP	EH	JS	EH	TO
1	4-11-01	U		SHEET 4 OF 9 WAS 4 OF 14. REVISED PLUNGER ROD STOP.	RP	EH	CS	JC	TO

ENGINEERING STANDARDS PROGRAM

ENGINEERING STANDARDS MANUAL

SECURITY FENCE
GATE LATCHING

TA-XX BLDG XXX

DRAWN	R.PEARSON
DESIGN	E.HOTH
CHECKED	C.SANCHEZ
DATE	8-18-04

SUBMITTED
DISCIPLINE POC: EDWARD HOTH

APPROVED FOR RELEASE
STANDARDS MANAGER: TOBIN ORUCH

Los Alamos NATIONAL LABORATORY
PO Box 1663
Los Alamos, New Mexico 87545

SHEET 4 OF 9

D.C.: UNCLASSIFIED | REVIEWER: LARRY BAYS | BASIS: BASIS | DATE:

PROJECT ID	DRAWING NO	ESR NO.:	REV
CHAPTER 3	ST-G2040-1	ESR #	3