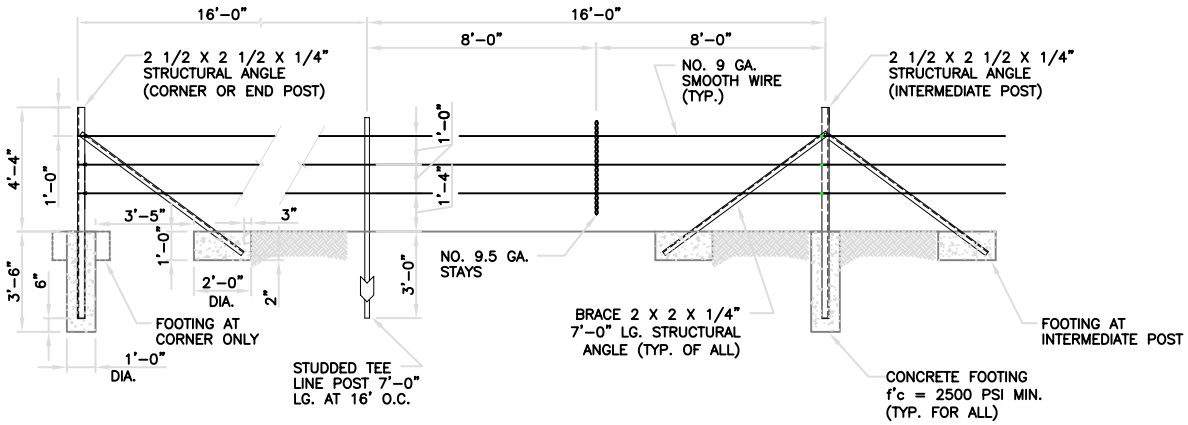

TYPICAL FENCE DETAIL

SCALE: NONE

DESIGNER NOTES:

(DO NOT INCLUDE ON CONSTRUCTION DRAWINGS)

1. COORDINATE WITH LANL MASTER SPECIFICATION 32 3100, WIRE FENCING.
2. IF ALLOWED BY ENV-EAQ VIA STANDARDS CIVIL POC, 12 1/2 GA. BARBED WIRE CAN BE SUBSTITUTED.
3. IF DESIRED, 4 STRANDS CAN BE SUBSTITUTED WITHOUT POC APPROVAL. SHOW BOTTOM STRAND AT 12 INCHES EL. AND 12 INCH SPACING THEREAFTER.

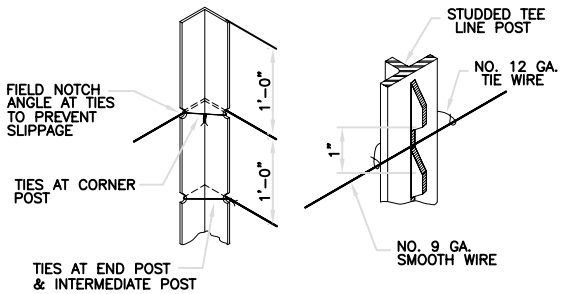

TYPICAL WIRE TIE DETAIL

SCALE: NONE

DRAWING DEVELOPED FOR ML-3/ ML-4 PROJECTS. FOR ML-1/ ML-2, ADDTIONAL REQUIRMENTS AND QA REVIEWS ARE REQUIRED. (REMOVED THIS NOTE WHEN INSERTED INTO A DRAWING PACKAGE).

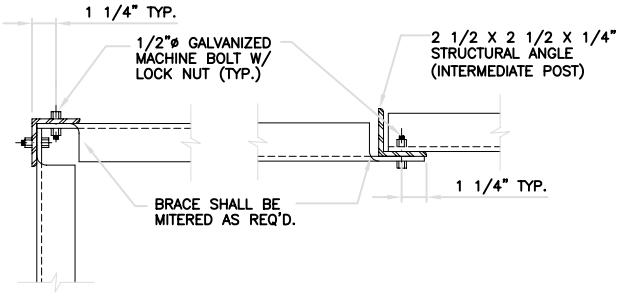

TYPICAL BRACE CONNECTION DETAIL

SCALE: NONE

NO	DATE	CLASS REV	ADC	DESCRIPTION	DWN	DSGN	CHKD	SUB	APP
1	2-23-05	U	DY	REVISED TITLE BLOCK REVISION DATA. ADTS - ENGINEERING LOGO. ADDED DETAIL SYMBOLS AND TEXT BLOCK.	RP	EH	TO	EH	TO

ENGINEERING STANDARDS PROGRAM

ENGINEERING STANDARDS MANUAL

FENCE - SMOOTH 3-STRAND
TYPICAL FENCE DETAILS

BLDG X TA-X

DRAWN	R.G.MARTINEZ
DESIGN	E.HOTH
CHECKED	T.ORUCH
DATE	10-10-02

SUBMITTED
DISCIPLINE POC: ED HOTH

APPROVED FOR RELEASE
STANDARDS MANAGER: TOBIN ORUCH

Los Alamos NATIONAL LABORATORY
PO Box 1663
Los Alamos, New Mexico 87545

SHEET 1 OF 2

CLASSIFICATION: U
REVIEWER: LARRY BAYS
DATE:

PROJECT ID: CHAPTER 3
DRAWING NO: ST-G2040-2
REV: 1