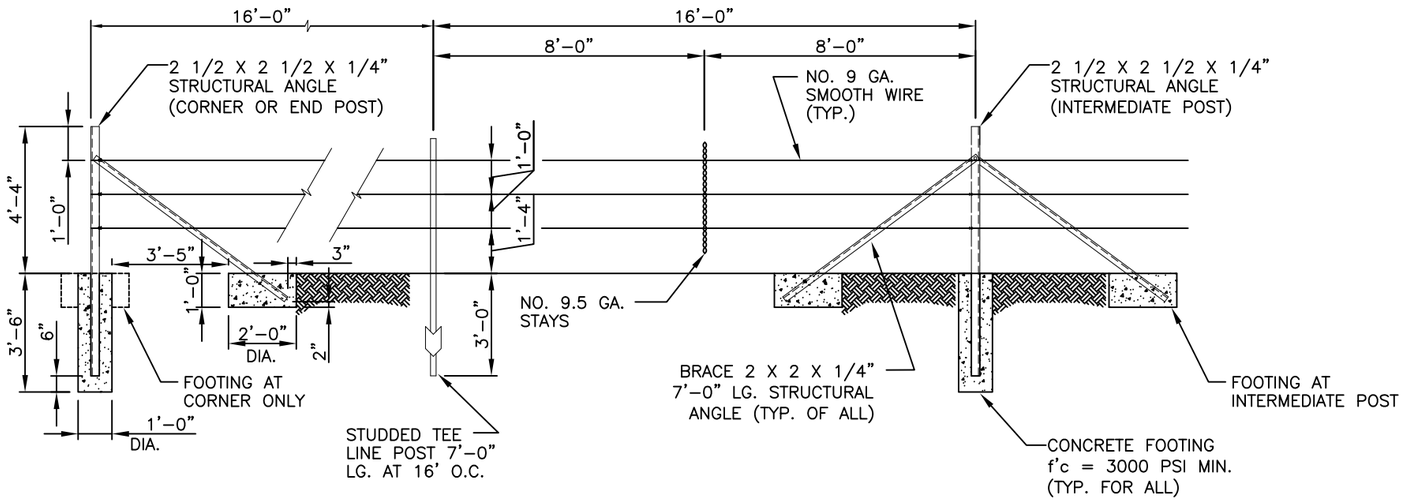

TYPICAL FENCE DETAIL

SCALE: NONE

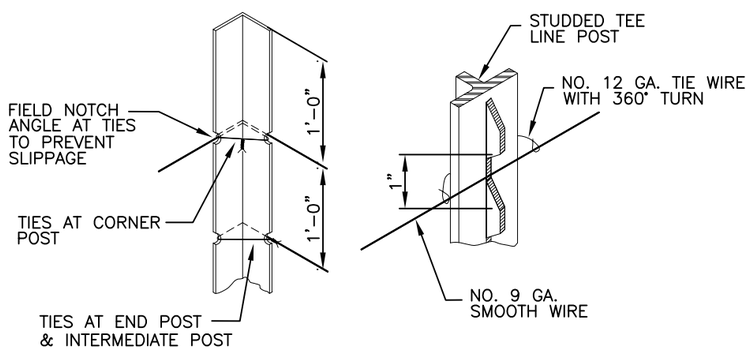

TYPICAL WIRE TIE DETAIL

SCALE: NONE

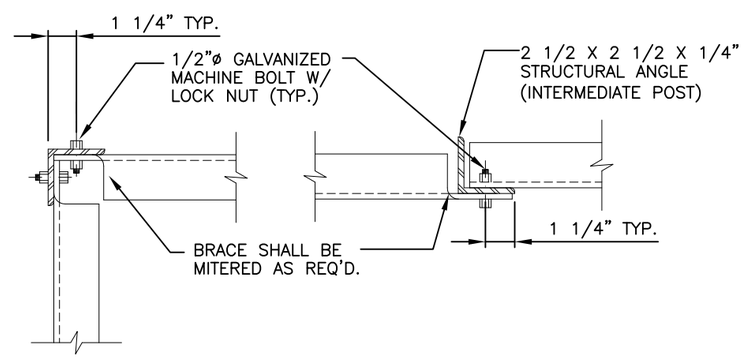

TYPICAL BRACE CONNECTION DETAIL

SCALE: NONE

DESIGNER NOTES:

(DO NOT INCLUDE ON CONSTRUCTION DRAWINGS)

1. COORDINATE WITH LANL MASTER SPECIFICATION 32 3100, WIRE FENCING.
2. IF ALLOWED BY ENV–EAQ VIA STANDARDS CIVIL POC, 12 1/2 GA. BARBED WIRE CAN BE SUBSTITUTED.
3. IF DESIRED, 4 STRANDS CAN BE SUBSTITUTED WITHOUT POC APPROVAL. SHOW BOTTOM STRAND AT 12 INCHES EL. AND 12 INCH SPACING THEREAFTER.

DRAWING DEVELOPED FOR ML–3/ ML–4 PROJECTS. FOR ML–1/ ML–2, ADDITIONAL REQUIREMENTS AND QA REVIEWS ARE REQUIRED. (REMOVED THIS NOTE WHEN IN–SERTED INTO A DRAWING PACK–AGE).

NO	DATE	CLASS REV	ADC	DESCRIPTION	DWN	DSGN	CHKD	SUB	APP
2	1–28–14	U		GENERAL REVISION ADDED 360° TURN TO 12 GA. TIE WIRE.	KT	MS	JG	RT	TO
1	2–23–05	U	DY	REVISED TITLE BLOCK REVISION DATA, ADTS – ENGINEERING LOGO. ADDED DETAIL SYMBOLS AND TEXT BLOCK.	RP	EH	TO	EH	TO

ENGINEERING STANDARDS PROGRAM

ENGINEERING STANDARDS MANUAL

FENCE – SMOOTH 3–STRAND
TYPICAL FENCE DETAILS

BLDG X TA–X

DRAWN	R.G.MARTINEZ
DESIGN	E.HOTH
CHECKED	T.ORUCH
DATE	10–10–02

SUBMITTED
DISCIPLINE POC: ED HOTH

APPROVED FOR RELEASE
STANDARDS MANAGER: TOBIN ORUCH

Los Alamos NATIONAL LABORATORY
PO Box 1663
Los Alamos, New Mexico 87545

SHEET 1 OF 2

CLASSIFICATION: U
REVIEWER: LARRY BAYS
DATE:

PROJECT ID: CHAPTER 3
DRAWING NO: ST–G2040–2
REV: 2

G:\LANL Eng Standards\Eng. Manual [LEM]\2. Approved\ST–G2040–2C1r1.dwg, 02/23/05 @ 11:53 093598