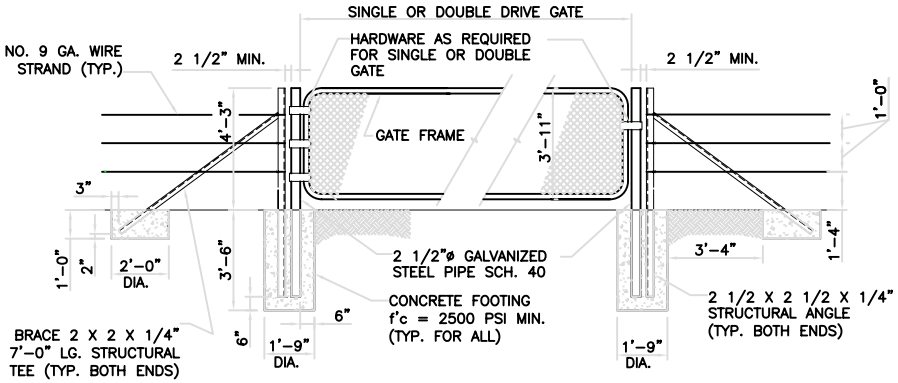

TYPICAL GATE DETAIL

SCALE: NONE

DRAWING DEVELOPED FOR ML-3/ ML-4 PROJECTS. FOR ML-1/ ML-2, ADDTIONAL REQUIRMENTS AND QA REVIEWS ARE REQUIRED. (REMOVED THIS NOTE WHEN INSERTED INTO A DRAWING PACKAGE).

NO	DATE	CLASS REV	ADC	DESCRIPTION	DWN	DSGN	CHKD	SUB	APP
1	2-23-05	U	DY	REVISED TITLE BLOCK REVISION DATA, ADTS - ENGINEERING LOGO. ADDED TEXT BLOCK.	RP	EH	TO	EH	TO

ENGINEERING STANDARDS PROGRAM

ENGINEERING STANDARDS MANUAL

FENCE - SMOOTH 3-STRAND
TYPICAL FENCE DETAILS

BLDG X TA-X

DRAWN	R.G.MARTINEZ
DESIGN	E.HOTH
CHECKED	T.ORUCH
DATE	10-10-02

SUBMITTED
DISCIPLINE POC: ED HOTH

APPROVED FOR RELEASE
STANDARDS MANAGER: TOBIN ORUCH

Los Alamos NATIONAL LABORATORY
PO Box 1663
Los Alamos, New Mexico 87545

SHEET 1 OF 2

CLASSIFICATION: U
REVIEWER: LARRY BAYS
DATE:

PROJECT ID: CHAPTER 3
DRAWING NO: ST-G2040-2
REV: 1