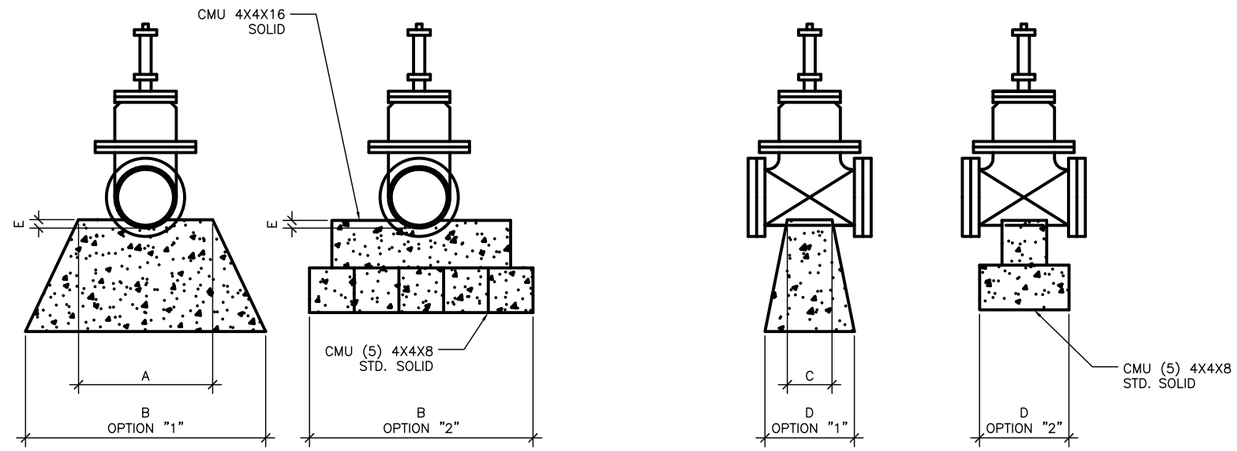

FRONT VIEW

SIDE VIEW

GENERAL NOTES:

1. CONCRETE f'c=3000 PSI MINIMUM.
2. BASE AREA MAY BE MODIFIED WHEN SUBSTITUTING PRECAST BLOCK.
3. BLOCK OR SUPPORT MUST BE UNIFORMLY SUPPORTED FROM BELOW BY UNDISTURBED SOILS.
4. AT TOP OF SUPPORT, ALLOW SUFFICIENT ROOM FOR ACCESS TO FLANGE CONNECTIONS.
5. AT FRONT VIEWS, NEAR FLANGE NOT SHOWN FOR CLARITY.

WATER VALVE SUPPORT DETAIL

X / C-XXXX

SCALE: NONE

VALVE SUPPORT TABLE

VALVE SIZE	A	B (MIN)	C	D (MIN)
6"	12"	20"	4"	4"
8"	14"	24"	4"	4"
10"	16"	26"	5"	5"
12"	18"	28"	5"	5"
14"	20"	30"	6"	6"
16"	22"	32"	8"	8"
18"	24"	34"	10"	10"

E= 1 1/2" MORTAR BED "CRADLE"

DRAWING DEVELOPED FOR ML-3/ML-4 PROJECTS. FOR ML-1/ML-2, ADDITIONAL REQUIREMENTS AND QA REVIEWS ARE REQUIRED. (REMOVE THIS NOTE WHEN INSERTED INTO A DRAWING PACKAGE).

NOTES FOR DESIGNER:

(DO NOT INCLUDE ON CONSTRUCTION DRAWINGS)

1. WHEN EDITING DETAIL TO SUIT PROJECT, ADD JOB SPECIFIC REQUIREMENTS AND DELETE ONLY THOSE PORTIONS THAT DO NOT APPLY. TO SEEK A VARIANCE FROM APPLICABLE REQUIREMENTS, CONTACT THE ESM CIVIL POC.

NO	DATE	CLASS REV	DC	DESCRIPTION	DWN	DSGN	CHKD	SUB	APP
2	1-28-14	U		GENERAL REVISION	KT	MS	JG	RT	TO
1	8-23-02	U		GENERAL REVISION AND DWG. NO. WAS ST3665.	RP	EH	MS	EH	TO

ENGINEERING STANDARDS PROGRAM

ENGINEERING STANDARDS MANUAL

WATER VALVE SUPPORT DETAIL

TA-XX BLDG XXX

DRAWN	R.PEARSON
DESIGN	E.HOTH
CHECKED	M.SMITHOUR
DATE	6-28-99

SUBMITTED
DISCIPLINE POC: EDWARD HOTH

APPROVED FOR RELEASE
STANDARDS MANAGER: TOBIN ORUCH

Los Alamos NATIONAL LABORATORY
PO Box 1663
Los Alamos, New Mexico 87545

SHEET 1 OF 1

D.C.: UNCLASSIFIED | REVIEWER: LARRY BAYS | BASIS: BASIS | DATE:

PROJECT ID	DRAWING NO	ESR NO.:	REV
CHAPTER 3	ST-G3010-6	ESR #	2