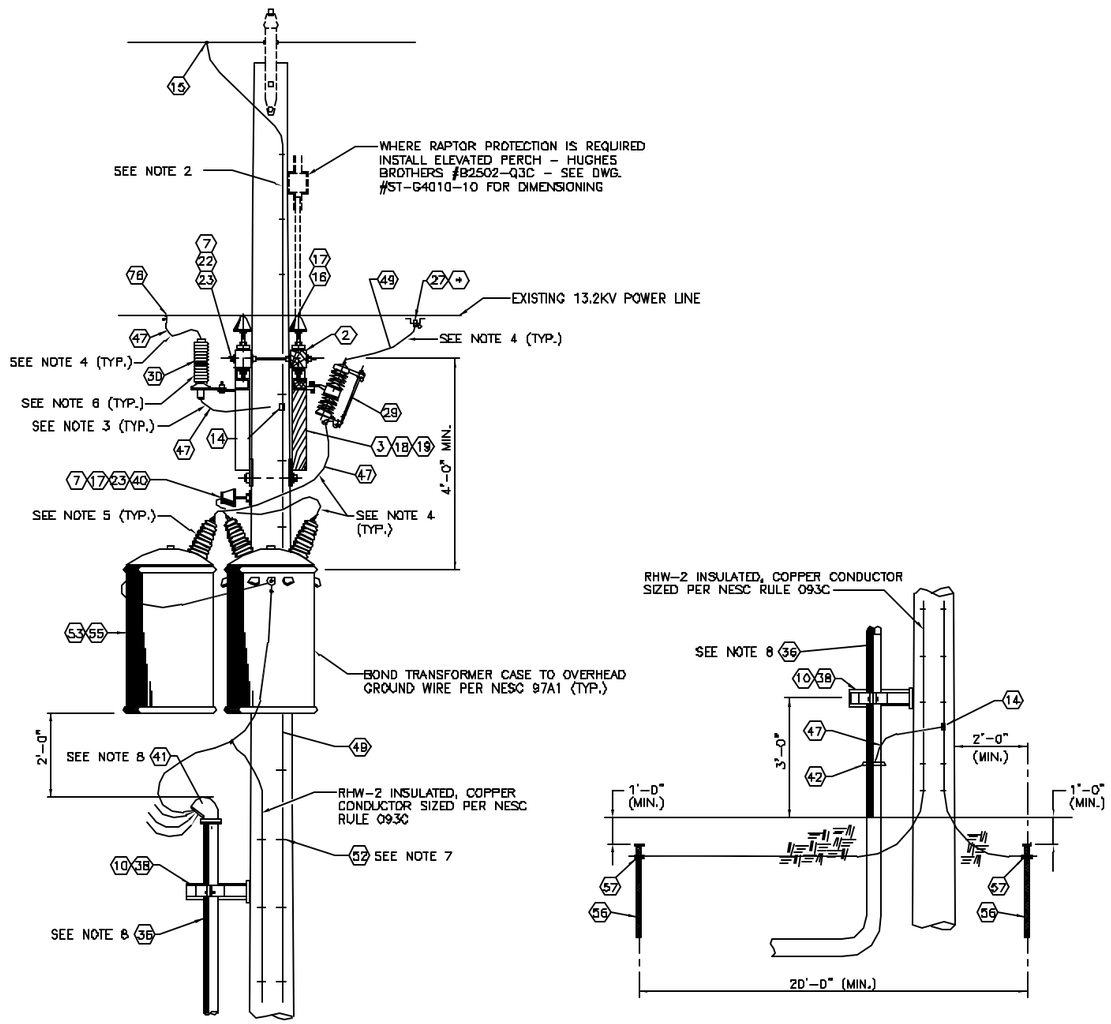

NEW 3–PHASE TRANSFORMER BANK ON EXISTING POLE WITH UNDERGROUND SECONDARY DETAIL

SCALE: NONE

GENERAL NOTES:

1. CONSTRUCTION FOR WIRE SIZES #4 SOLID COPPER TO #3/0 ACSR (6/1).
2. GROUND OVERHEAD STATIC AT EVERY POLE. WHERE WILDLIFE/RAPTOR PROTECTION IS REQUIRED, GROUNDING DOWN CONDUCTOR SHALL BE INSULATED FROM OVERHEAD SHIELD WIRE TO 3'–0" BELOW TRANSFORMERS.
3. WHERE WILDLIFE/RAPTOR PROTECTION IS REQUIRED USE 600V. INSULATED WIRE.
4. WHERE WILDLIFE/RAPTOR PROTECTION IS REQUIRED USE NON–SHIELDED 15kV INSULATED CABLE FOR CONNECTIONS TO TRANSFORMER PRIMARY BUSHINGS.
5. WHERE WILDLIFE/RAPTOR PROTECTION IS REQUIRED PROVIDE BUSHING COVERS SIMILAR TO PREFORMED LINE PRODUCTS #WP–10T.
6. WHERE WILDLIFE/RAPTOR PROTECTION IS REQUIRED USE HUBBELL/OHIO BRASS #7325 MOUNTING BRACKET WITH PROTECTIVE CAPS IN LIEU OF #7224 MOUNTING BRACKET.
7. STAPLES ON GROUND WIRE SHALL BE 2"–0" APART EXCEPT FOR A DISTANCE OF 8'–0" ABOVE GROUND AND 8'–0" FROM TOP OF POLE WHERE THEY SHALL BE 6" APART.
8. LANL UTILITY SERVICES INSTALLS ALL SECONDARY CONDUIT & CONDUCTORS TO THE FIRST DISCONNECT DEVICE.
9. FOR BILL OF MATERIALS, SEE DWG. ST–G4010–21, SHT. 2 OF 2.
10. EQUIPMENT ITEM NUMBERS (⟨1⟩) REFER TO EQUIPMENT NUMBERS IN LANL SUPPORT SERVICES CONTRACTOR'S MASTER BILL OF MATERIALS. ONLY THOSE NUMBERS USED ON THIS DRAWING ARE SHOWN.

NOTES FOR DESIGNER:
(DO NOT INCLUDE ON CONSTRUCTION DRAWING)
1. COMPLY WITH CURRENT EDITION OF LANL DRAFTING MANUAL FOR CALL–OUTS PROTOCOL AND LOCATION OF SCHEDULES/MATERIAL.
2. ASSIGN AN APPROPRIATE DRAWING NUMBER PER CURRENT EDITION OF LANL DRAFTING MANUAL PROTOCOL FOR DETAILS.

DRAWING DEVELOPED FOR ML–3/ML–4 PROJECTS. FOR ML–1/ML–2, ADDITIONAL REQUIREMENTS AND QA REVIEWS ARE REQUIRED. (REMOVE THIS NOTE WHEN INSERTED INTO A DRAWING PACKAGE).

NO	DATE	CLASS REV	DESCRIPTION	DWN	VER	CHKD	SUB	APP

FACILITY & WASTE OPERATIONS
SYSTEMS ENGINEERING & MAINTENANCE

LANL ENGINEERING MANUAL
SITE ELECTRICAL DISTRIBUTION STDS.

NEW 3 PHASE TRANSFORMER BANK ON EXISTING POLE WITH UNDERGROUND SECONDARY DETAIL

DRAWN	W. BAKER
DESIGN	D. BRYANT
CHECKED	J. LANDMAN
DATE	8/30/02

BLDG. X TA–X

SUBMITTED
DISCIPLINE POC: DAVID POWELL

APPROVED FOR RELEASE
STANDARDS MANAGER: TOBIN GRUCH

Los Alamos NATIONAL LABORATORY
PO Box 1663
Los Alamos, New Mexico 87545

SHEET 1 of 2

CLASSIFICATION U | REVIEWER MICHAEL LADACH | DATE 8/30/02

PROJECT ID: CHAPTER 7
DRAWING NO: ST–G4010–21
REV: 0

C:\LANL Engineering Standards\Eng. Manual [LEM]\2. Approved\ST–G4010–21E1.dwg, 11/04/02 @ 14:27 0B3B98