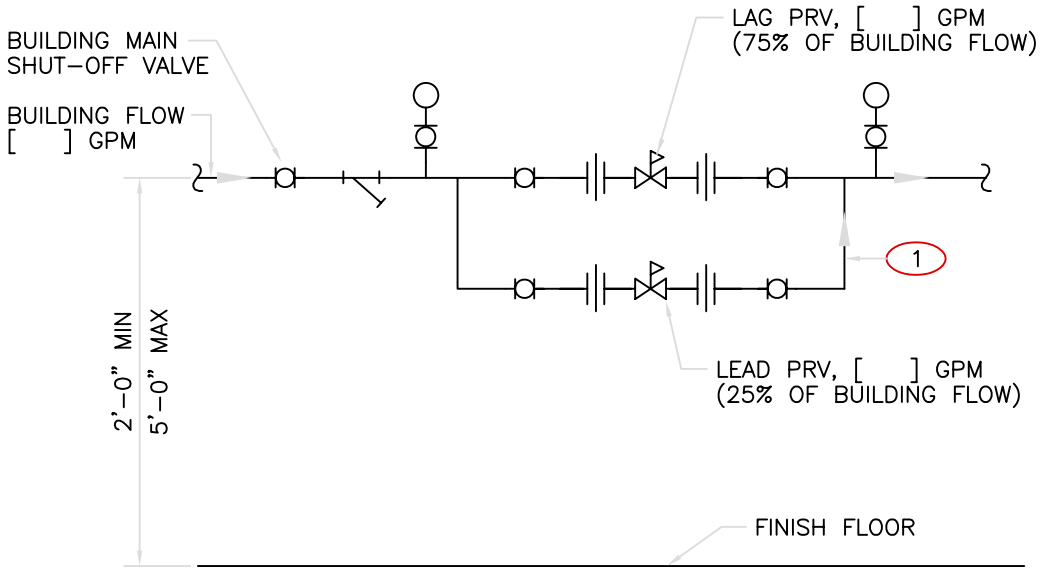

KEYED NOTE:

1. STACK PRV'S VERTICALLY. PRV'S MAY BE INSTALLED SIDE–BY–SIDE PROVIDING A 12" MIN CLEARANCE IS MAINTAINED.

WATER PRV PIPING DETAIL

SCALE: NONE

PRESSURE REDUCING VALVE SIZE AND "CLA–VAL" MODEL NUMBER		
SYSTEM FLOW (GPM)	LEAD VALVE (25% OF BLDG FLOW)	LAG VALVE (75% OF BLDG FLOW)
25–100	1"–990	1 1/2"–990
101–200	1 1/2"–990	2"–90–01AS
201–300	1 1/2"–90–01AS	3"–90–01AS
301–600	2"–90–01AS	4"–90–01AB

NOTE: DO NOT INCLUDE TABLE ON CONSTRUCTION DRAWINGS

DRAWING DEVELOPED FOR ML–3/ML–4 PROJECTS. FOR ML–1/ML–2, ADDITIONAL REQUIREMENTS AND QA REVIEWS ARE REQUIRED. (REMOVE THIS NOTE WHEN INSERTED INTO A DRAWING PACKAGE).

NOTES FOR DESIGNER: (DO NOT INCLUDE ON CONSTRUCTION DRAWINGS)

1. SEE SHEET 3.

NO	DATE	CLASS REV	ADC	DESCRIPTION	DWN	DSGN	CHKD	SUB	APP
3	7–21–05	U	DY	3"–90G–01AS WAS 3" 90G–01AB AND DELETED THE "G" FROM MODEL NUMBERS. REVISED ENG. DIV. LOGO.	RP	RF	JM	CD	TO
2	8–14–03	U		EDITORIAL CHANGES & DWG NO. WAS ST6122.	RP	RF	RR	GG	TO
1	9–6–02	U		GENERAL REVISION.	RP	JR	GG	GG	TO

ENGINEERING STANDARDS PROGRAM

ENGINEERING STANDARDS MANUAL

WATER PRV PIPING DETAIL
BUILDING SERVICE, 25–600 GPM

DRAWN: R.PEARSON
DESIGN: R.FROST
CHECKED: G.GREWAL
DATE: 6–28–99

BLDG X TA–X

SUBMITTED
DISCIPLINE POC: CHARLES DUPRE

APPROVED FOR RELEASE
STANDARDS MANAGER: TOBIN ORUCH

Los Alamos NATIONAL LABORATORY
PO Box 1663
Los Alamos, New Mexico 87545

SHEET 1 OF 3

CLASSIFICATION: U
REVIEWER: LARRY BAYS
DATE:

PROJECT ID: CHAPTER 6
DRAWING NO: ST–D2020–2
REV: 3