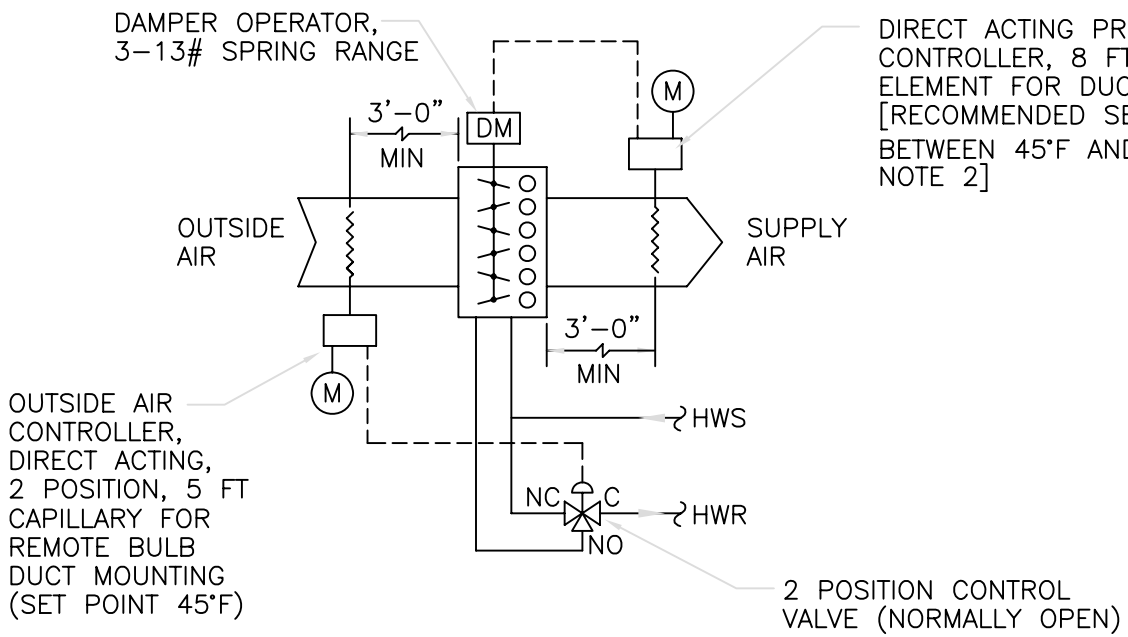

DRAWING DEVELOPED FOR ML–3/ML–4 PROJECTS. FOR ML–1/ML–2, ADDITIONAL REQUIREMENTS AND QA REVIEWS ARE REQUIRED. (REMOVE THIS NOTE WHEN INSERTED INTO A DRAWING PACKAGE).

PNEUMATIC CONTROL DETAIL

SCALE: NONE

NOTES FOR DESIGNER:

1. SEE SHEET 7 AND 8 COIL PIPING DETAIL.
2. SET POINT ESTABLISHED BY DESIGNER.

NO	DATE	CLASS REV	ADC	DESCRIPTION	DWN	DSGN	CHKD	SUB	APP
1	8–14–03	U		REVISED TO COMPLY WITH DRAFTING MANUAL. DWG NO WAS ST6121 & REVISED NOTES.	RP	AB	JM	GG	TO

ENGINEERING STANDARDS PROGRAM

ENGINEERING STANDARDS MANUAL

HOT WATER COIL PIPING PNEUMATIC CONTROL DETAIL

DRAWN R.PEARSON
DESIGN A.BRIDGE
CHECKED G.GREWAL
DATE 6–28–99

BLDG X TA–X

SUBMITTED
DISCIPLINE POC: GURINDER GREWAL

APPROVED FOR RELEASE
STANDARDS MANAGER: TOBIN ORUCH

Los Alamos NATIONAL LABORATORY
PO Box 1663
Los Alamos, New Mexico 87545

SHEET 9 OF 11

CLASSIFICATION: U
REVIEWER: LARRY BAYS
DATE:

PROJECT ID CHAPTER 6
DRAWING NO ST–D30GEN–2
REV 1