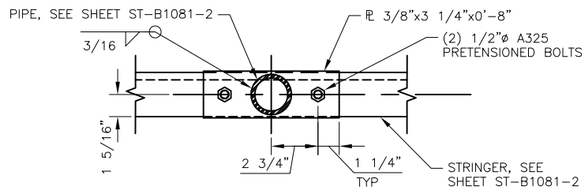

SECTION VIEW

1 / 2 OF 3 DETAIL

3"=1'-0"

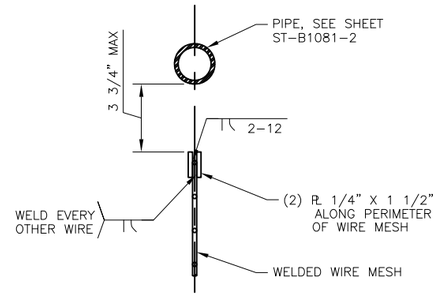

2 / 2 OF 3 DETAIL

3"=1'-0"

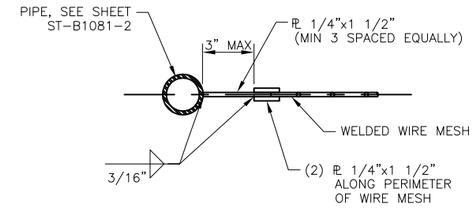

3 / 2 OF 3 DETAIL

3"=1'-0"

GENERAL NOTES

1. REFER TO SHEET 2 OF 3 FOR SIZES NOT SHOWN ON THIS SHEET.

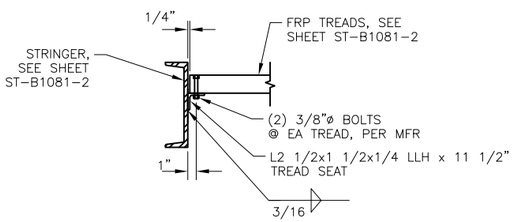

4 / 2 OF 3 DETAIL

1 1/2"=1'-0"

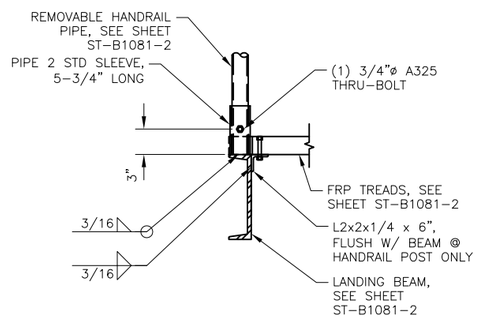

5 / 2 OF 3 DETAIL

1 1/2"=1'-0"

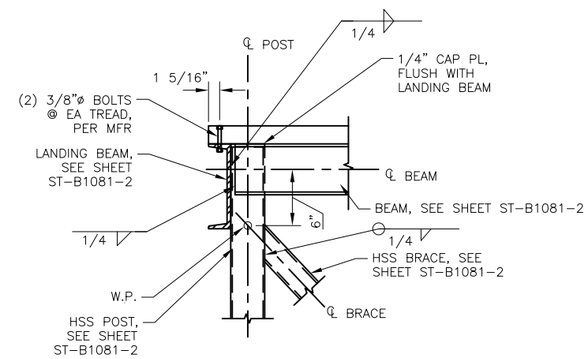

6 / 2 OF 3 DETAIL

1 1/2"=1'-0"

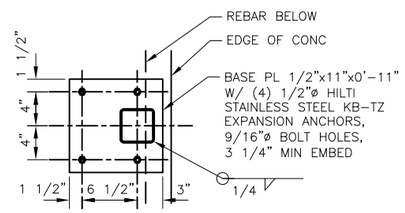

SECTION VIEW

7 / 3 OF 3 DETAIL

1 1/2"=1'-0"

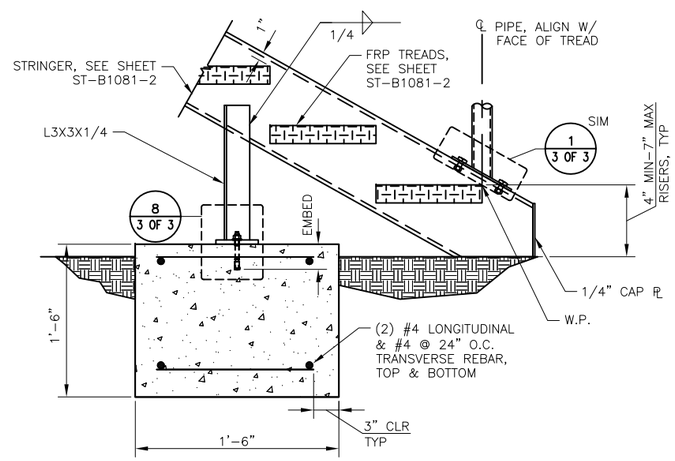

NOTE:
1. TREAD SEAT NOT SHOWN FOR CLARITY
2. 3/8" TOLERANCE WITHIN SINGLE FLIGHT BETWEEN LARGEST AND SMALLEST TREAD OR RISER

9 / 2 OF 3 DETAIL

1 1/2"=1'-0"

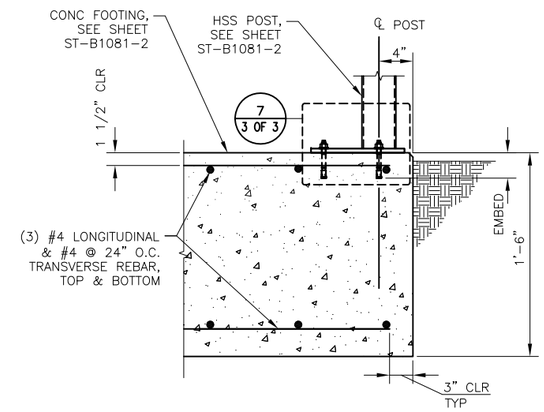

10 / 2 OF 3 DETAIL

1 1/2"=1'-0"

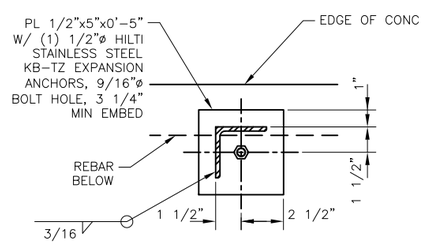

SECTION VIEW

8 / 3 OF 3 DETAIL

3"=1'-0"

NO	DATE	CLASS REV	ADC	DESCRIPTION	DWN	DSGN	CHKD	SUB	APP

ENGINEERING STANDARDS PROGRAM

ENGINEERING STANDARDS MANUAL

METAL STAIRS – DETAILS
OPTIONAL USE

BLDG : XXXX TA-XX

DRAWN	R. G. MARTINEZ, H. ESCOBEDO
DESIGN	H. ESCOBEDO
CHECKED	S. KOTHARI
DATE	4-16-12

SUBMITTED: D. VOLKMAN
APPROVED FOR RELEASE: STANDARDS MANAGER: TOBIN ORUCH

Los Alamos NATIONAL LABORATORY
PO Box 1663
Los Alamos, New Mexico 87545

SHEET 3 OF 3

CLASSIFICATION: UNCLASSIFIED
REVIEWER: ED SEAWALT
DATE: 4-18-12

PROJECT ID: CHAPTER 5
DRAWING NO: ST-B1081-3
REV: 0

P:\FWO-FE\LANL Eng Standards\Unofficial Details\Struct\ST-B1081-3 unofficial.dwg, 04/13/12 @ 08:57 119113