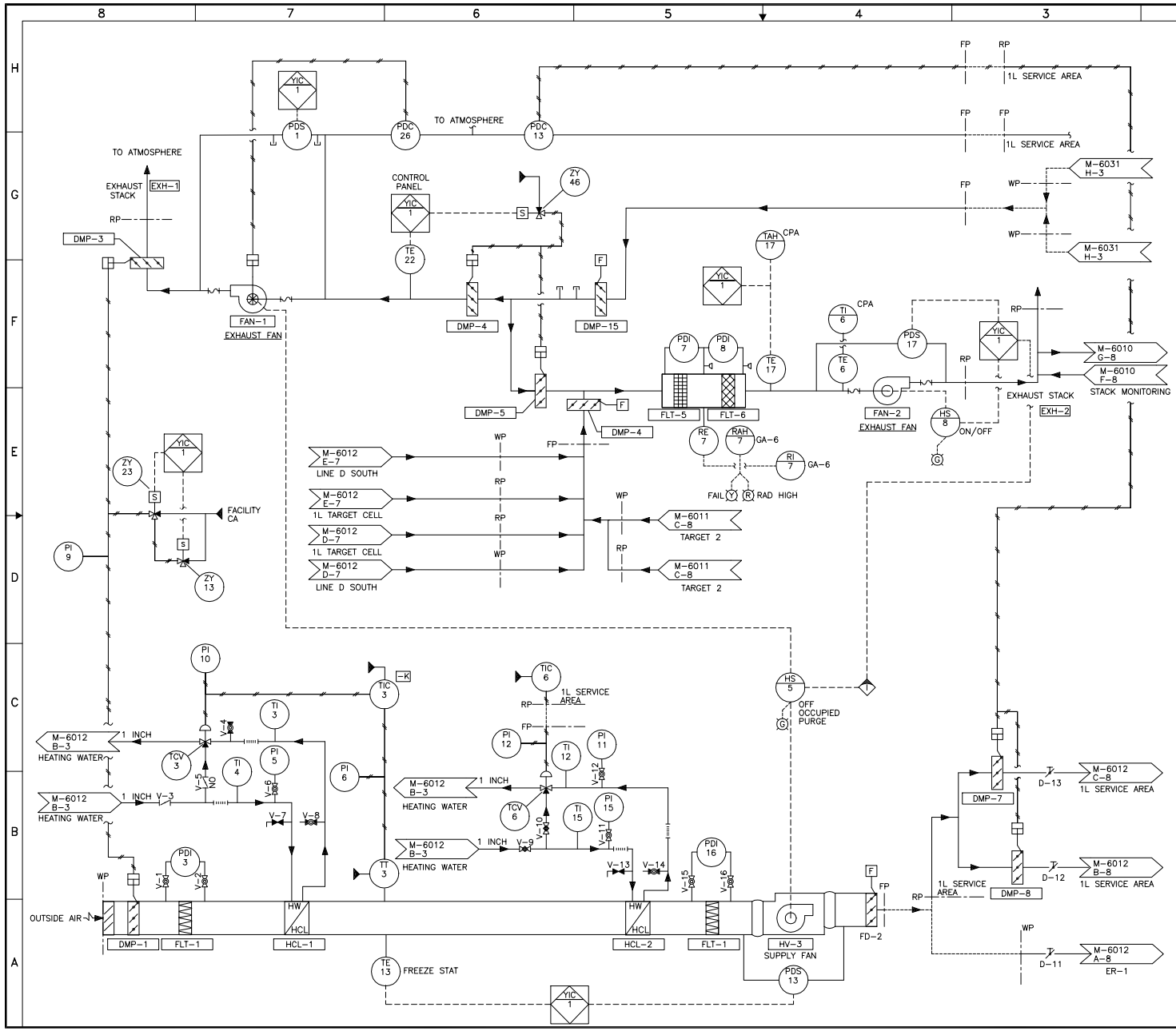

GENERAL NOTES:

1. FOR DRAFTING STANDARDS GUIDELINES AND SYMBOLS FOR FLOW DIAGRAMS, REFER TO THE LANL DRAFTING MANUALAND M-0001 & M-0002.
2. EXAMPLE DRAWING TO ILLUSTRATE A TYPICAL PROCESS FLOW OR PIPING & INSTRUMENT DIAGRAM AND SHOULD NOT BE CONSTRUED TO BE A FUNCTIONAL SYSTEM.
3. FOR DRAWING TITLE BLOCK CONTENTS REFER TO THE DRAFTING MANUAL.
4. THE SHEET NUMBER IN THE TITLE BLOCK IS A REFERENCE NUMBER FOR THIS MANUAL DRAWING EXAMPLE.

NO	DATE	CLASS REV	DESCRIPTION	DWN	VER	CHKD	SUB	APP

FACILITY & WASTE OPERATIONS
SYSTEMS ENGINEERING & MAINTENANCE

LEM EXAMPLE DRAWING
MECHANICAL

PIPING AND INSTRUMENTATION DIAGRAM
HVAC

BLDG. XX TA-XX

DRAWN
DESIGN
CHECKED
DATE

SUBMITTED
APPROVED FOR RELEASE

Los Alamos NATIONAL LABORATORY
PO Box 1663
Los Alamos, New Mexico 87545

SHEET M-6030
OF

CLASSIFICATION U
REVIEWER
DATE
PROJECT ID
DRAWING NO
REV 0

G:\Standards Charts & Symbols\Diagrams\PAID M-6030.dwg, 09/12/01 @ 15:58 086407