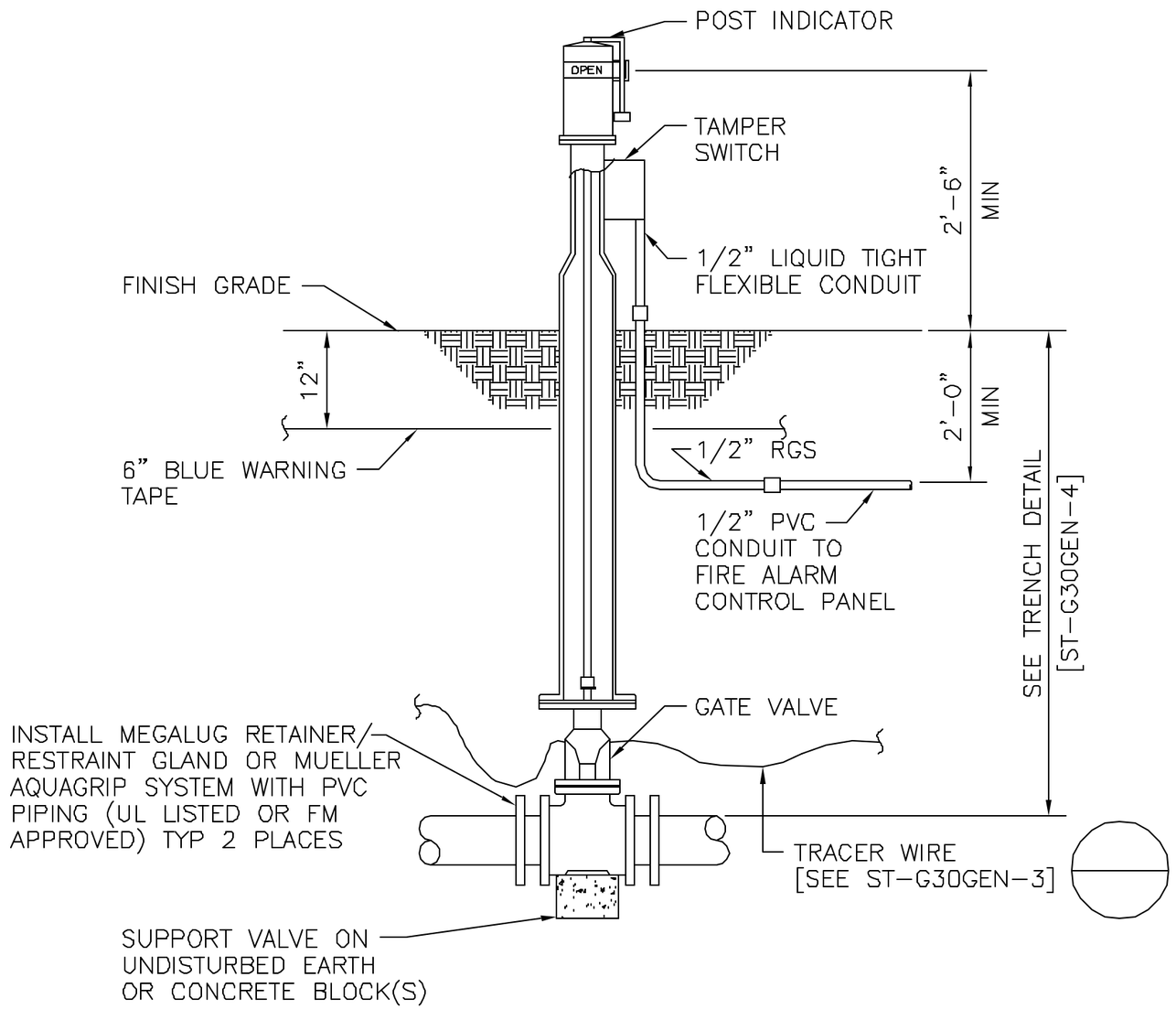

DRAWING DEVELOPED FOR ML-3 PROJECTS. FOR ML-1/ML-2, ADDITIONAL REQUIREMENTS AND QA REVIEWS ARE REQUIRED. (REMOVE THIS NOTE WHEN INSERTED INTO A DRAWING PACKAGE).

SHUT-OFF VALVE DETAIL FOR FIRE LINE (PIV)

SCALE: NONE

NOTES FOR DESIGNER: (DO NOT INLCUDE ON CONSTRUCTION DRAWINGS)

1. SEE SHEET 3.

NO	DATE	CLASS REV	DESCRIPTION	DWN	VER	CHKD	SUB	APP
1	8-23-02	U	GENERAL REVISION AND DWG. NO. WAS STB108.	RP	EH	MS	EH	TO

FACILITY & WASTE OPERATIONS
SYSTEMS ENGINEERING & MAINTENANCE

LANL ENGINEERING MANUAL

WATER PIPING SHUT-OFF VALVE DETAIL
FIRE LINE (PIV)

BLDG. X TA-X

DRAWN	R.PEARSON
DESIGN	E.HOTH
CHECKED	M.SMITHDUR
DATE	8-28-99

SUBMITTED
DISCIPLINE POC: E. HOTH

APPROVED FOR RELEASE
STANDARS MANAGER: TOBIN DRUCH

Los Alamos NATIONAL LABORATORY
PO Box 1663
Los Alamos, New Mexico 87545

SHEET 2
2 OF 3

CLASSIFICATION U REVIEWER LARRY BAYS DATE

PROJECT ID CHAPTER 3
DRAWING NO ST-G3010-3
REV 1

G:\LANL Engineering Standards\Eng. Manual (LEM)\2. Approved\ST-G3010-3C2r1.dwg, 09/03/02 @ 10:47 DB3088