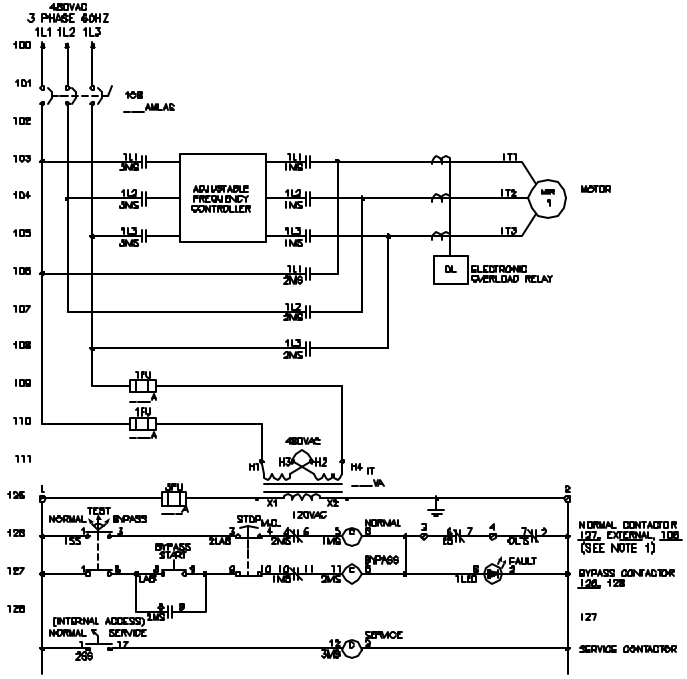

SEQUENCE OF OPERATION

1. WITH BYPASS SELECTOR SWITCH 155 IN TEST POSITION, "NORMAL" CONTACTOR 1MS AND "BYPASS" CONTACTOR 2MS WILL BE OPEN AND MOTOR WILL BE STOPPED. THE ADJUSTABLE FREQUENCY DRIVE WILL BE CONNECTED TO THE LINE.
2. WITH BYPASS SELECTOR SWITCH 155 IN NORMAL POSITION, "NORMAL" CONTACTOR 1MS WILL BE CLOSED AND "BYPASS" CONTACTOR 2MS WILL BE OPEN MOTOR WILL BE CONTROLLED BY THE ADJUSTABLE FREQUENCY DRIVE.
3. WITH BYPASS SELECTOR SWITCH 155 IN THE BYPASS POSITION, "NORMAL" CONTACTOR 1MS WILL BE OPEN AND "BYPASS" CONTACTOR 2MS WILL BE CLOSED; MOTOR WILL RUN AT FULL SPEED.
4. WITH BYPASS SELECTOR SWITCH IN EITHER THE NORMAL OR THE BYPASS POSITION, OPENING OF NORMALLY CLOSED FIRESTAT, SMOKE DETECTOR, OR FREEZESTAT CONTACTS WILL CAUSE MOTOR TO STOP AND FAULT LED TO LIGHT.
5. WITH INTERNALLY ACCESSABLE SERVICE SELECTOR SWITCH IN THE NORMAL POSITION, "SERVICE" CONTACTOR 3MS WILL BE CLOSED AND THE ADJUSTABLE FREQUENCY DRIVE WILL BE CONNECTED TO THE LINE.
6. WITH THE INTERNALLY ACCESSABLE SERVICE SELECTOR SWITCH IN THE SERVICE POSITION, "SERVICE" CONTACTOR 3MS WILL BE OPEN AND THE ADJUSTABLE FREQUENCY DRIVE WILL BE DISCONNECTED FROM THE LINE.

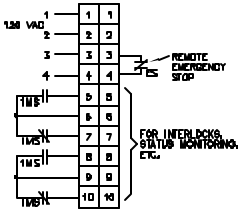

MOTOR CONTROL DIAGRAM – AFC BYPASS/ISOLATION

SCALE: NONE

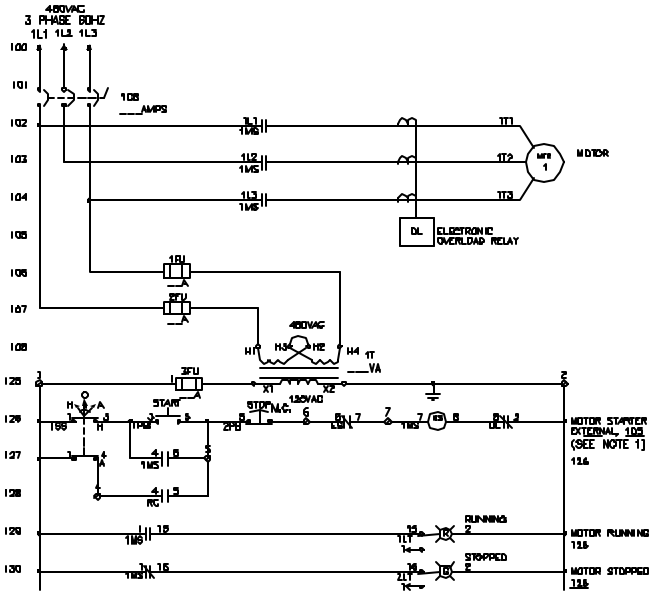

SEQUENCE OF OPERATION

1. WITH H-O-A SELECTOR SWITCH "166" IN ANY POSITION AND MOTOR NOT RUNNING, GREEN "STOPPED" PILOT LIGHT "2LT" IS ON, RED "RUNNING" PILOT LIGHT "1LT" IS OFF.
2. WITH H-O-A SELECTOR SWITHCH "155" IN "HAND" POSITION, PRESS "START" PUSHBUTTON "1PB", MOTOR STARTS, RED "RUNNING" PILOT LIGHT "1LT" IS ON AND GREEN "STOPPED" PILOT LIGHT "2LT" IS OFF.
3. WITH H-O-A SELECTOR SWITCH "155" IN "AUTO" POSITION, CLOSING OF MAINTAINED CONTACT REMOTE CONTROL CONTACTS "RC" STARTS MOTOR, RED "RUNNING" PILOT LIGHT "1LT" IS ON, GREEN "STOPPED" PILOT LIGHT "2LT" IS OFF.
4. WITH H-O-A SELECTOR SWITCH "155" IN ANY POSITION, OPENING OF MAINTAINED REMOTE "EMERGENCY STOP" CONTACTS "ES" STOPS MOTOR, GREEN "STOPPED" PILOT LIGHT "2LT" IS ON, RED "RUNNING" PILOT LIGHT "1LT" IS OFF.
5. WITH H-O-A SELECTOR SWITCH "155" IN "HAND" OR "AUTO" POSITION, PRESS MAINTAINED ACTION, ROTARY RELEASE, "STOP" PUSHBUTTON, MOTOR STOPS, GREEN "STOPPED" PILOT LIGHT "2LT" IS ON, RED "RUNNING" PILOT LIGHT "1LT" IS OFF.

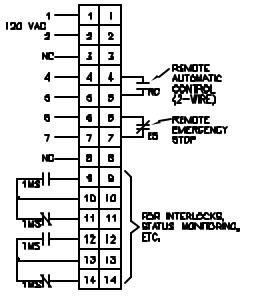

MOTOR CONTROL DIAGRAM – TWO WIRE CONTROL

SCALE: NONE

GENERAL NOTES

1. NUMBERS ON THE RIGHT SIDE OF LADDER DIAGRAMS INDICATE DIAGRAM LINE NUMBERS FOR CONTROL DEVICE CONTACTS. UNDERLINED NUMBER INDICATES A NORMALLY CLOSED CONTACT.

DESIGNER:
EDIT MOTOR CONTROL DIAGRAMS TO BE PROJECT-SPECIFIC.

NO	DATE	CLASS REV	DESCRIPTION	DR	DP	DV	DP	TO
1	11-19-02		NEW DRAWING NO., CORRECTED LAYERS. REPLACES ST-7007					

FACILITY & WASTE OPERATIONS
SYSTEMS ENGINEERING & MAINTENANCE

LANL ENGINEERING MANUAL

MOTOR CONTROL DIAGRAMS

BLDG. TA–

DRAWN: DAVID POWELL
DESIGN: DAVID POWELL
CHECKED: D. STINEBELL
DATE: 08-22-02

SUBMITTED: DISCIPLINE FOCE DAVID W. POWELL
APPROVED FOR RELEASE: SENIOR MANAGER TOBIN DRUCH

Los Alamos National Laboratory
P.O. BOX 1663
Los Alamos, New Mexico 87545

SHEET OF

CLASSIFICATION: UNCL
REVIEWER: LARRY BOYS
DATE:

PROJECT ID: CHAPTER 7
DRAWING NO: ST-D5D20-1
REV: 1

NOT FOR CONSTRUCTION