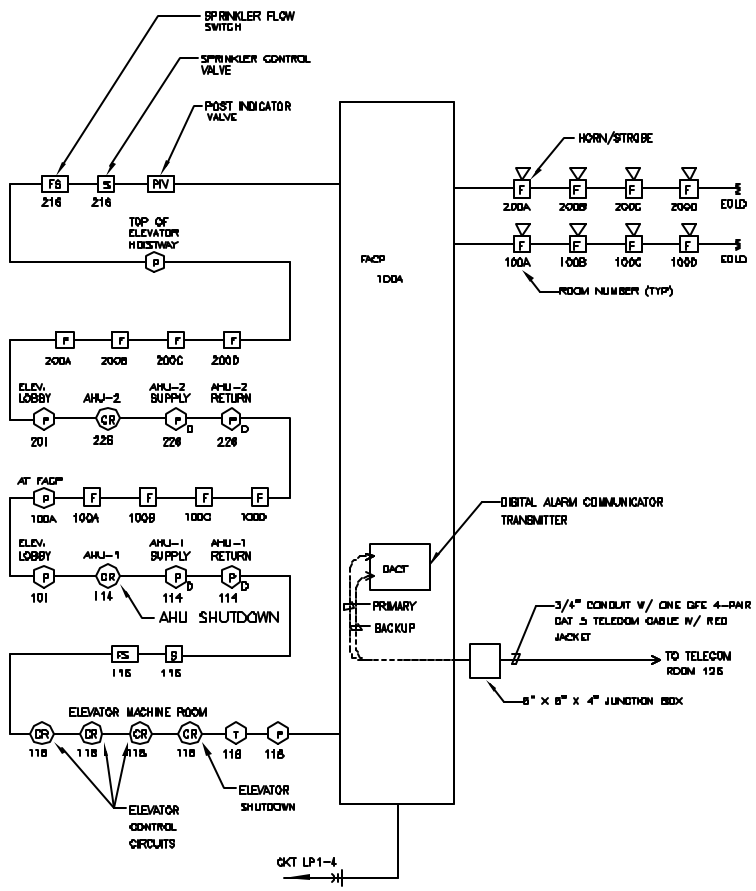


## ADDRESSABLE FIRE ALARM SYSTEM RISER DIAGRAM

SCALE: NONE

SYSTEM OUTPUTS

SYSTEM INPUTS

| | | A | B | C | D | E | F | G | H | I | J | K | L | M | N | O | P | Q |
|---|---|---|---|---|---|---|---|---|---|---|---|---|---|---|---|---|---|---|
| | | FACP ANNUNCIATION | | | | | | | | | | | NOTIFICATION | | | FIRE SAFETY CONTROL | | |
| | | ACTUATE COMMON ALARM SIGNAL INDICATOR | ACTUATE AUDIBLE ALARM SIGNAL | ACTUATE COMMON SUPERVISORY SIGNAL INDICATOR | ACTUATE AUDIBLE SUPERVISORY SIGNAL | ACTUATE COMMON TROUBLE SIGNAL INDICATOR | ACTUATE AUDIBLE COMMON TROUBLE SIGNAL | DISPLAY CHANGE OF STATUS ON FACP SCREEN | ACTUATE EVACUATION SIGNALS | TRANSMIT FIRE ALARM SIGNAL TO CENTRAL STATION | TRANSMIT SUPERVISORY SIGNAL TO CENTRAL STATION | TRANSMIT TROUBLE SIGNAL TO CENTRAL STATION | RECALL ELEVATOR TO PRIMARY RECALL FLOOR | RECALL ELEVATOR TO ALTERNATE RECALL FLOOR | ACTUATE THIRD ELEVATOR CONTROL CIRCUIT | SHUTDOWN ELEVATOR (SHUNT TRIP CIRCUIT BREAKER) | STOP FIRST FLOOR AIR HANDLING UNIT | STOP SECOND FLOOR AIR HANDLING UNIT |
| 1 | MANUAL FIRE ALARM STATION – FIRST FLOOR | ● | ● | | | | | ● | ● | ● | | | | | | | | |
| 2 | MANUAL FIRE ALARM STATION – SECOND FLOOR | ● | ● | | | | | ● | ● | ● | | | | | | | | |
| 3 | ELEVATOR LOBBY SMOKE DETECTOR – GROUND FLOOR | ● | ● | | | | | ● | ● | ● | | | | ● | | | | |
| 4 | ELEVATOR LOBBY SMOKE DETECTOR – SECOND FLOOR | ● | ● | | | | | ● | ● | ● | | | ● | | | | | |
| 5 | ELEVATOR MACHINE ROOM/HOISTWAY SMOKE DETECTOR | ● | ● | | | | | ● | ● | ● | | | ● | | ● | | | |
| 6 | ELEVATOR MACHINE ROOM HEAT DETECTOR | ● | ● | | | | | ● | ● | ● | | | ● | | | ● | | |
| 7 | FIRST FLOOR AHU DUCT SMOKE DETECTOR | ● | ● | | | | | ● | ● | ● | | | | | | | ● | |
| 8 | SECOND FLOOR AHU DUCT SMOKE DETECTOR | ● | ● | | | | | ● | ● | ● | | | | | | | | ● |
| 9 | WATERFLOW – FIRST FLOOR | ● | ● | | | | | ● | ● | ● | | | ● | | | | ● | ● |
| 10 | WATERFLOW – SECOND FLOOR | ● | ● | | | | | ● | ● | ● | | | ● | | | | ● | ● |
| 11 | SPRINKLER CONTROL VALVE – FIRST FLOOR | | | ● | ● | | | ● | | | ● | | | | | | | |
| 12 | SPRINKLER CONTROL VALVE – SECOND FLOOR | | | ● | ● | | | ● | | | ● | | | | | | | |
| 13 | FIRE ALARM AC POWER FAILURE | | | ● | ● | | | ● | | | ● | | | | | | | |
| 14 | FIRE ALARM SYSTEM LOW BATTERY | | | | | ■ | ■ | ● | | | | ● | | | | | | |
| 15 | OPEN CIRCUIT | | | | | ■ | ■ | ● | | | | ● | | | | | | |
| 16 | GROUND FAULT | | | | | ● | ● | ● | | | | ● | | | | | | |
| 17 | NOTIFICATION APPLIANCE CIRCUIT SHORT | | | | | ● | ● | ● | | | | ● | | | | | | |
| 18 | DACT TRANSMISSION CHANNEL FAILURE | | | | | ● | ● | ● | | | | ● | | | | | | |

## FIRE ALARM SYSTEM INPUT/OUTPUT MATRIX

DESIGNER:
EDIT FIRE ALARM RISER DIAGRAM AND INPUT/OUTPUT MATRIX TO BE PROJECT-SPECIFIC. IN CONSTRUCTION DRAWINGS PUT RISER DIAGRAM AND INPUT/OUTPUT MATRIX ON SEPARATE SHEETS IN ACCORDANCE WITH THE LANL DRAFTING MANUAL.

| NO | DATE | CLASS REV | DESCRIPTION | DWN | DES | CHKD | SUB | APP |
|---|---|---|---|---|---|---|---|---|
| 1 | 11-18-02 | | NEW DRAWING NO. CORRECTED LAYERS, CHANGED TO ADDRESSABLE SYSTEM. REPLACES ST-7008 | GB | DP | DW | DP | TO |

FACILITY & WASTE OPERATIONS
SYSTEMS ENGINEERING & MAINTENANCE

LANL ENGINEERING MANUAL

FIRE ALARM RISER DIAGRAM AND INPUT/OUTPUT MATRIX

BLDG. TA–

DRAWN: DAVID PENELL
DESIGN: DAVID PENELL
CHECKED: D. BITHERELL
DATE: 08-22-03

SUBMITTED: DISCIPLINE FOCE DAVID W. PORELL
APPROVED FOR RELEASE: SENIOR/PRINCIPAL MANAGER: TODD DEUCH

Los Alamos NATIONAL LABORATORY
PO BOX 1663
Los Alamos, New Mexico 87545

SHEET OF

CLASSIFICATION: UNCL
REVIEWER: LARRY BOYS
DATE:

PROJECT ID: CHAPTER 7
DRAWING NO: ST-D5030-2
REV: 1