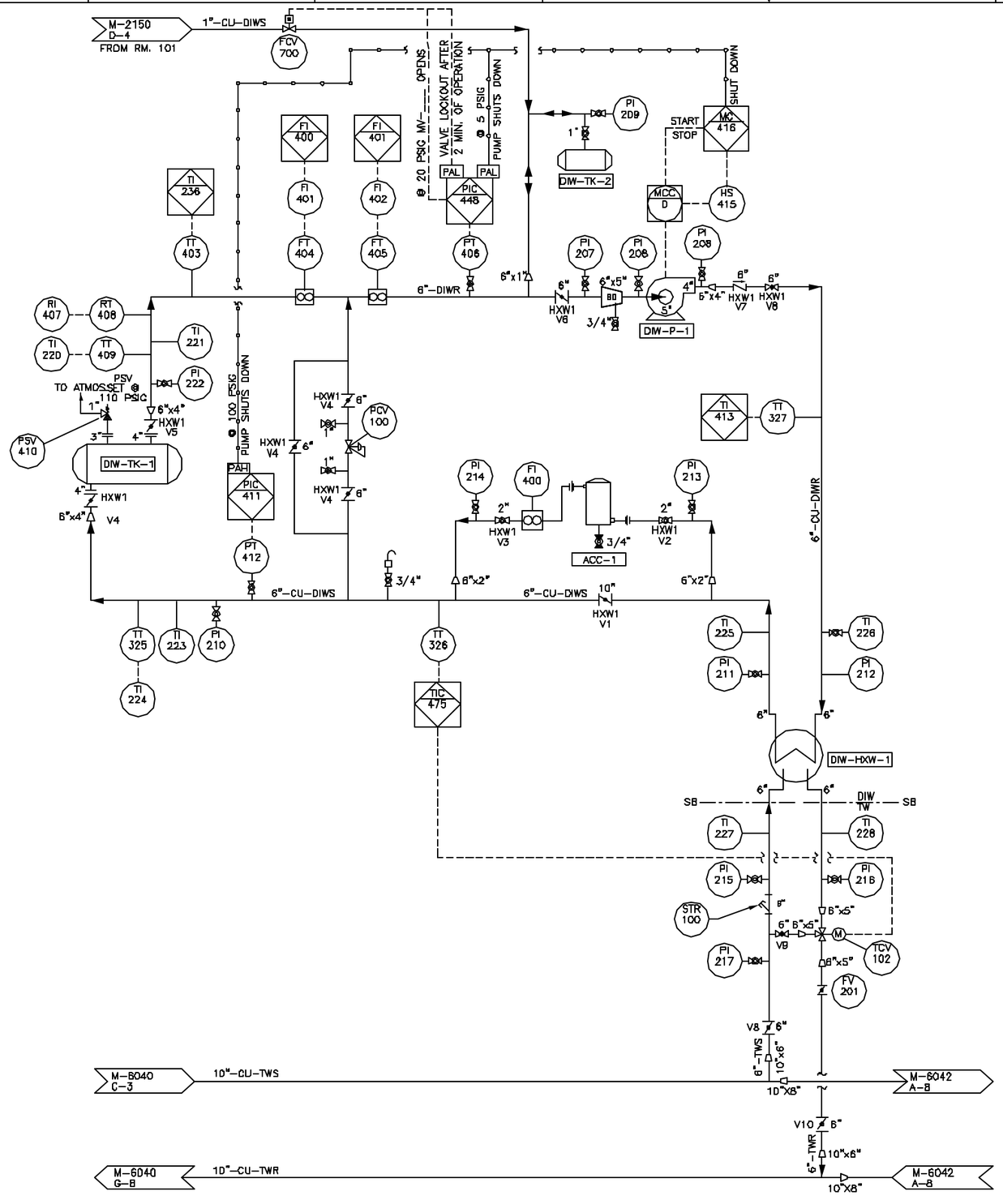


## GENERAL NOTES:

1. FOR DRAFTING STANDARDS GUIDELINES AND SYMBOLS FOR FLOW DIAGRAMS, REFER TO THE LANL DRAFTING MANUALAND M-0001 & M-0002.
2. EXAMPLE DRAWING TO ILLUSTRATE A TYPICAL PROCESS FLOW OR PIPING & INSTRUMENT DIAGRAM AND SHOULD NOT BE CONSTRUED TO BE A FUNCTIONAL SYSTEM.
3. FOR DRAWING TITLE BLOCK CONTENTS REFER TO THE DRAFTING.
4. THE SHEET NUMBER IN THE TITLE BLOCK IS A REFERENCE NUMBER FOR THIS MANUAL DRAWING EXAMPLE.

| NO | DATE | CLASS REV | DESCRIPTION | DWN | VER | CHKD | SUB | APP |
|---|---|---|---|---|---|---|---|---|

FWO

FACILITY & WASTE OPERATIONS
SYSTEMS ENGINEERING & MAINTENANCE

LEM EXAMPLE DRAWING
MECHANICAL

PIPING AND INSTRUMENTATION DIAGRAM
TOWER, DI, AND CHILLED WATER

BLDG. XX TA-XX

DRAWN
DESIGN
CHECKED
DATE

SUBMITTED
APPROVED FOR RELEASE

Los Alamos NATIONAL LABORATORY
PO Box 1663
Los Alamos, New Mexico 87545

SHEET M-6041
OF

CLASSIFICATION U
REVIEWER
DATE
PROJECT ID
DRAWING NO
REV 0

G:\Standards Charts & Symbols\Diagrams\P&ID M-6041.dwg, 09/12/01 @ 15:59 DBB407